ALLENSTOWN
ALLENSTOWN, NH
SO.138210
HALE QMAX

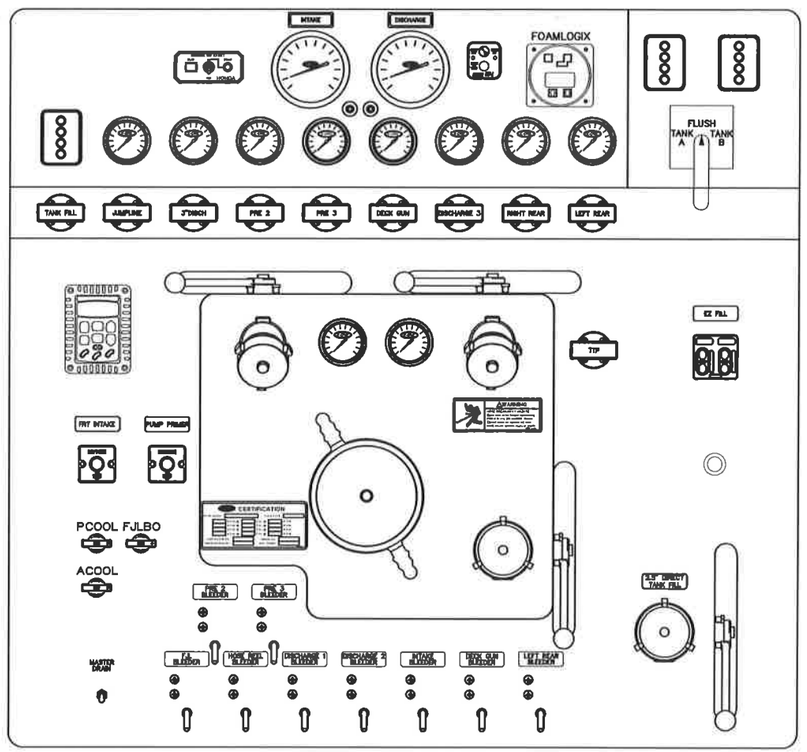

LEFT PANEL

FORWARD

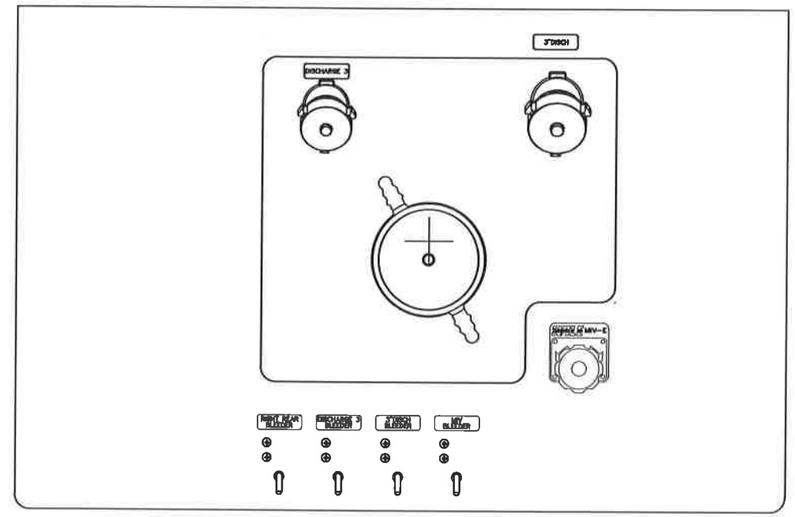

RIGHT PANEL

FORWARD

GFRANKLIN	A	INITIAL RELEASE	PREBUILD	2013-JUN-28	GFRANKLIN
GFRANKLIN	A	INITIAL RELEASE	INITIAL RELEASE	2013-MAY-30	GFRANKLIN
DRAWN BY	REV	BODY	DESCRIPTION	DATE	APPROVED
PUMP PANEL		LAYOUT REV	PUMP PANEL REVISIONS		

ALLENSTOWN FIRE DEPT.

ALLENSTOWN, NH

SO.138210 / Q52918

CUSTOM 42 PUMPER

E-ONE TYPHOON X MEDIUM CAB 4X2 CHASSIS

2000 GPM HALE QMAX PUMP
990 GALLON WATER TANK
20 GALLON INTEGRAL "A" FOAM CELL
20 GALLON INTEGRAL "B" FOAM CELL
HALE FOAMLOGIX 5.0 SYSTEM

HOSE LOAD:
250' OF 2.50" DJ
200' OF 1.75" DJ
500' OF 1.75" DJ
500' OF 2.50" DJ
1500' OF 5.00" LDH
200' OF 1.75" DJ

COMPT.	OPENING		INTERIOR DIMENSION		
L1/L3	42W	30H	42W	30H	26D
L3/L4	72W	12H	72W	12H	12D
R1/R3	42W	46H	42W 12H 12D UPPER 42W 30H 26D LOWER		
R2	56W	12H	56W	12H	12D
B1	38W	20H	38W	20H	25D
B2/B3	21W	30H	24W	30H	26D

THIS DRAWING IS FOR REFERENCE PURPOSES. ALL DIMENSIONS ARE SUBJECT TO MINOR VARIATIONS DUE TO MANUFACTURING PROCESSES.

DEALER APPROVAL _____ DATE _____ ☐AS IS

CUSTOMER APPROVAL _____ DATE _____ ☐WITH REVISIONS

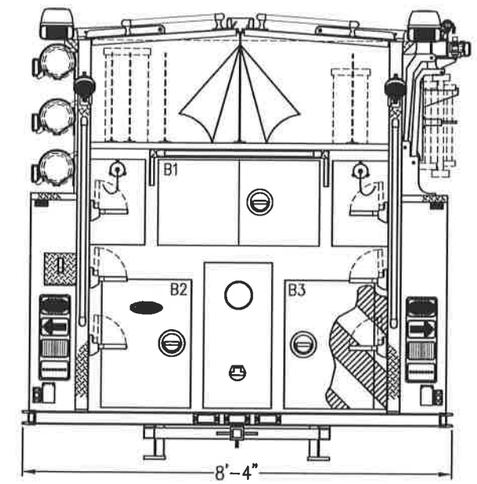

HOSEBED HEIGHT:
(FOR REFERENCE ONLY)
TO TAILBOARD: 63"
TO GROUND: 87"

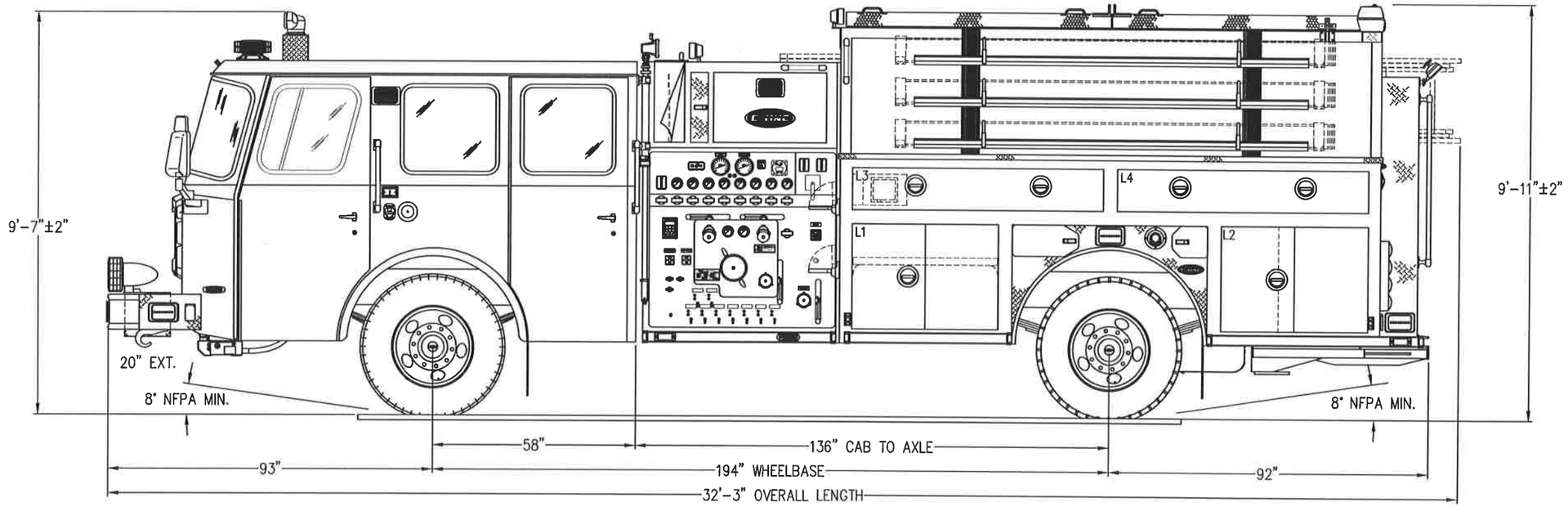

DRAWN BY	REV	DESCRIPTION	DATE	APPROVED
DJB	A	INITIAL RELEASE	2013-MAY-30	DJB

PROPOSAL REVISIONS

SHEET 1 OF 2

ALLENSTOWN FIRE DEPT.

ALLENSTOWN, NH

SO.138210 / Q52918

CUSTOM 42 PUMPER

E-ONE TYPHOON X MEDIUM CAB 4X2 CHASSIS

THIS DRAWING IS FOR REFERENCE PURPOSES. ALL DIMENSIONS ARE SUBJECT TO MINOR VARIATIONS DUE TO MANUFACTURING PROCESSES.

DEALER APPROVAL	DATE	☐AS IS
CUSTOMER APPROVAL	DATE	☐WITH REVISIONS

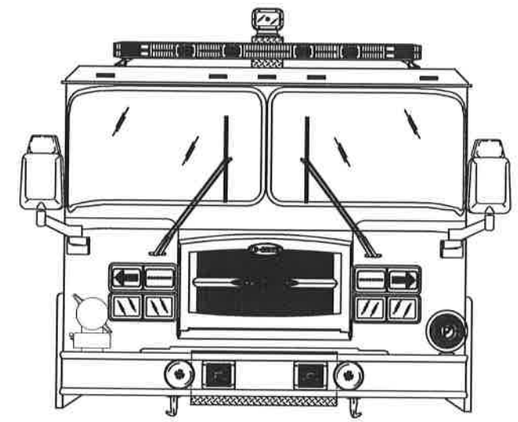

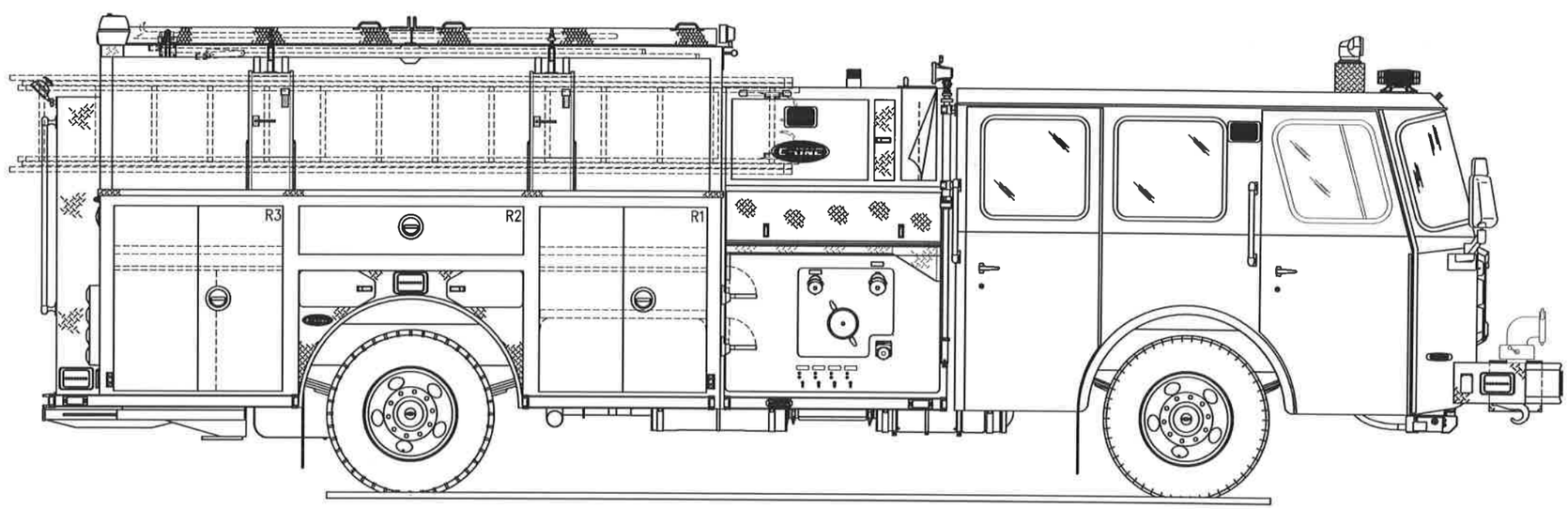

DJB	A	INITIAL RELEASE	2013-MAY-30	DJB
DRAWN BY	REV	DESCRIPTION	DATE	APPROVED
		PROPOSAL REVISIONS		SHEET 2 OF 2